Fluid-o-Tech
POWER THE FLOW

Magnet drive gear pump-motor units DGM09 series

The DGM09 series magnet drive gear pumps derive from the well established mag drive MG200 series.
Built to handle clean water and relatively viscous fluids at low pressure, the DGM09 series pump-motor unit has low pulsation and is capable of handling fluids at a maximum temperature of 95 °C (203 F). The pump housing and the gears are made of Vectra. Seals are available in NBR, EPDM or VITON®.
The seal less design is guarantee of reliability. Suction/discharge ports are 8 mm barbed end.

- Motor: 12-24 V DC, 3000 rpm, brush type

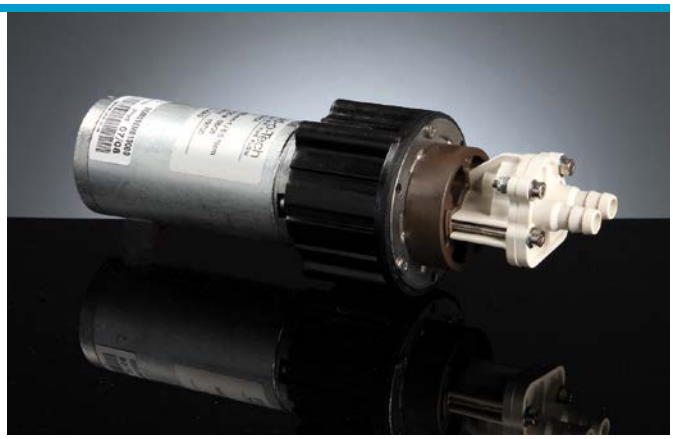

MAIN APPLICATIONS

- Water purification
- Laser cooling
- Spraying
- Water recirculation
- Condensation removal
- Low pressure carbonation
- Sanitization

NSF CE

MODEL NUMBER MATRIX

Position	1	2	3	4	Customiz.
Code	DGM	09	E	M01	0000

POS	DESCRIPTION	CODE
1	Pump series	**DGM** = magnet drive
2	Gears width thickness	**09** = 9 mm
3	Elastic material	**E** = EPDM **N** = NBR **V** = VITON®
4	Motor	**000** = none **M01** = 3000 rpm/24V **M03** = 3000 rpm/12V

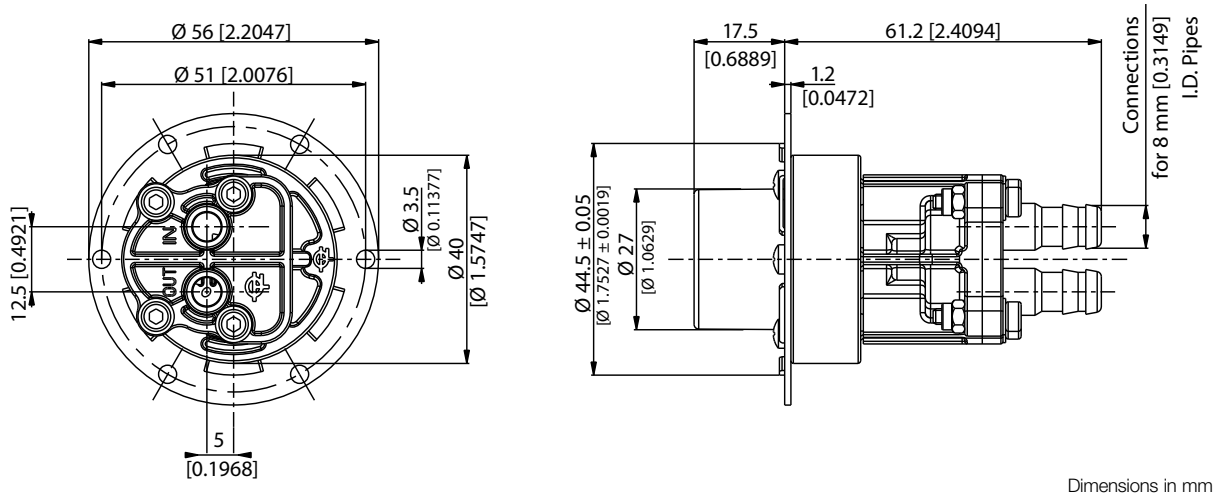

Dimensions in mm [inches]

* Dimensions without motor and adapter

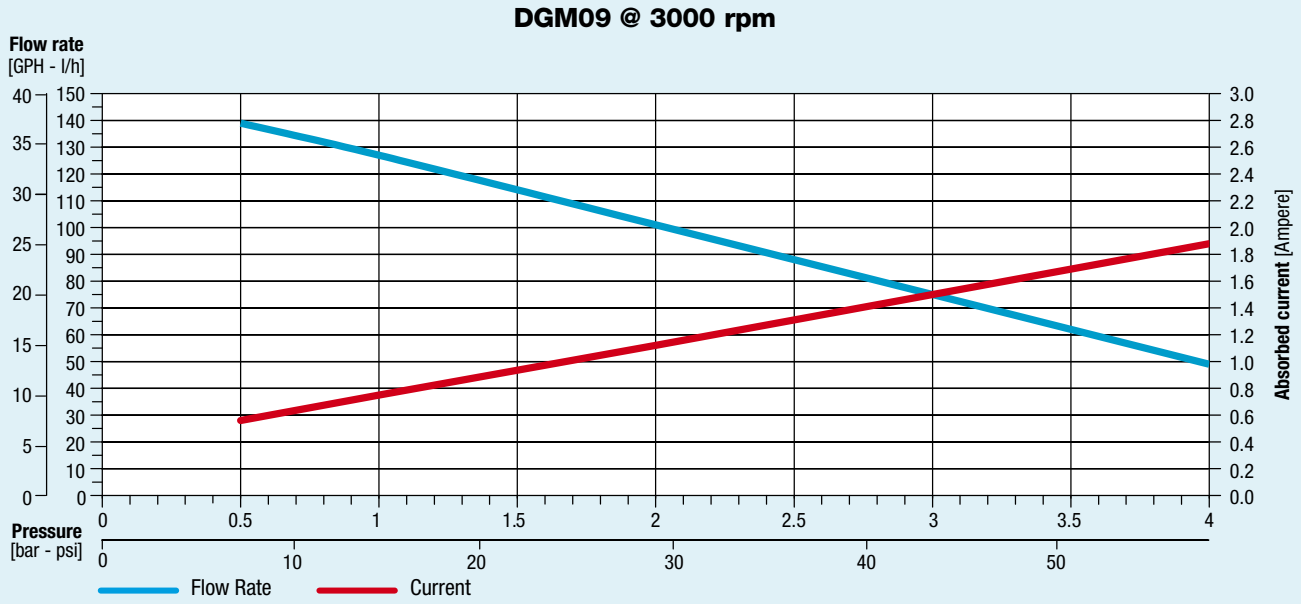

Note: Characteristics with water at 20 °C (68 F) and without relief valve. Fluids different from water must be validated by the Customer. Temperature requirements different from ambient temperature must be mentioned on the order. Different materials are available upon request. Use a filter before the pump inlet no larger than 10 micron